AGABEKOV
LIGHTING COMPANY INTERNATIONAL®

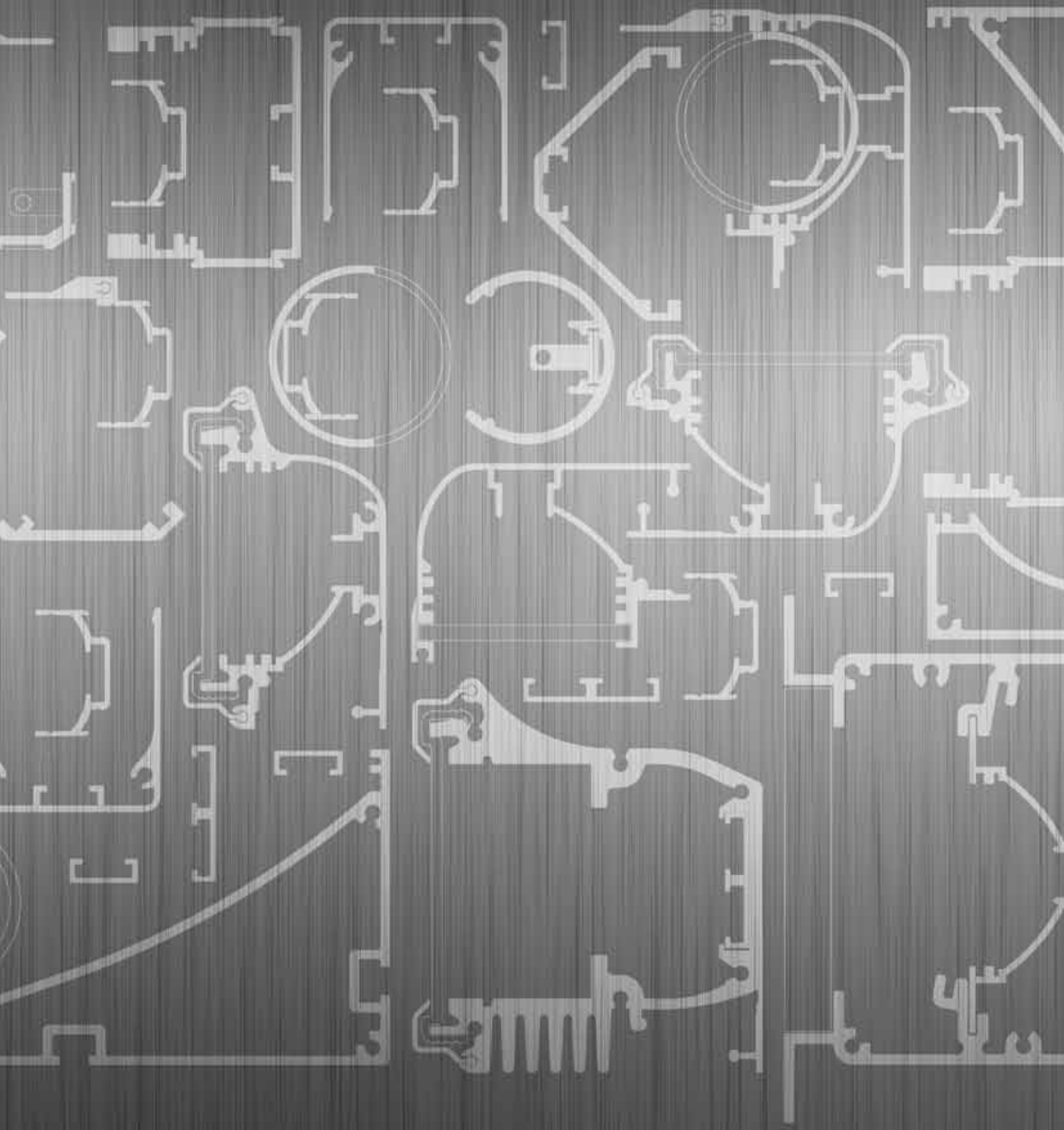

LINEAR LIGHTING PROFILE

Ivan Picelj : kybos SA, 1969, plexiglas,
photo: M. Koman
@ copyright - tous droits réservés

SUMMARY

LIGHTING UNIT 4

LUMINAIRE LED IP20 12

LUMINAIRE LED IP44 to IP68 14

LUMINAIRE XENON IP20 18

LUMINAIRE XENON IP44 to IP68 20

LUMINAIRE FLUORESCENT IP44 22

ACCESSORIES 24

PROTECTION AND RECOMMENDATIONS 32

PROTECTION INDEX - IP 34

SYMBOLS & ABBREVIATIONS 35

AGA-LED® VS XENON

New technological breakthrough

AGA-LED® consumes only 1/7th of the energy for Xenon for at least the same amount of light output.

Also the lifetime is worth mentioning.
As for xenon, the lifetime states the average time before the filament will break and lamp is broken.
For the AGA-LED® on the other hand, the lifetime represents the burning hours, which the light output is degraded to 70% of its initial value! So the light source isn't broken but gives off less light!

Also it is a fact that a xenon light bulb, which uses a filament, will degrade much faster when the bulb is turned on/off more often. This due to the immediate temperature shock. The AGA-LED® doesn't have this disadvantage. They can be switched on and off infinitely during their lifetime.

When a xenon light bulb ages, not only the light output will degrade, but also the color temperature will shift. This is not the case with the AGA-LED®. The light output will drop over time but the color temperature will stay the same over its whole lifetime.

Due to the fact that the lifetime of xenon is much shorter, more replacements are needed and if they don't replace all bulbs at the same time, you can see the color differences between bulbs.

Philippe Aerts
R&D Engineer

	Aga-Led Modules		Xenon sources : Long Life			
	04LS32/2400	06LS25/2000	3W	5W	8.5W	10W
Luminous Flux / Unit	~74 lm	~94lm	~12.6 lm	~40 lm	~70 lm	~90 lm
Color White	2400K	2000K	2300K	2400K	2600K	2500K
Ra CRI	80	80	95-100	95-100	95-100	95-100
Viewing angle	120°	120°	360°	360°	360°	360°
Voltage	24 Vdc	24 Vdc	24 Vdc	24 Vdc	24 Vdc	24 Vdc
Power	1.2W	1.2W	3W	5W	8.5W	10W
Lifetime	50'000h	50'000h	20'000 h	20'000 h	10'000 h	20'000 h

CONNECTORS

RIGID LOOP

FESTOON

CLIP 4 POSITIONS

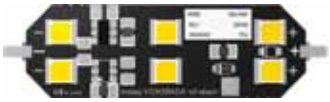

LED manufactured for AGABEKOV Patent
Europeen EP 1 373 787 B1 / United States US 6 971 767 B2 / Japanese JP 2004-523872

AGABEKOV SA ***Manufacture*** 6, ROUTE DE COMPOIS
CH-1222 VESENAZ - GENEVA - SWITZERLAND
Tel. +41 22 752 47 45 Fax. +41 22 752 37 08
Email: info@agabekov.com

AGABEKOV SA ***Bureau d'étude*** 6, ROUTE DE COMPOIS
CH-1222 VESENAZ - GENEVA - SWITZERLAND
Tel. +41 22 752 47 45 Fax. +41 22 752 37 08
Internet: www.agabekov.com

XENON

Référence	Xenon
	Rigid Loop
	43 x 10mm

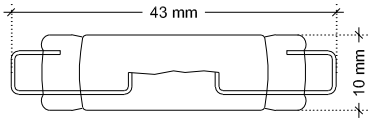

Technical Datas:

Type	High Brightness				Long life								
Glass	Clear or Frosted				Clear or Frosted								
Voltage	12V		24V		12V				24V				26V
Power	5 W	10W	5W	10W	3 W	5 W	8.5 W	10 W	3 W	5 W	8.5 W	10 W	8.5 W
CCT - Kelvin	2700K	2750K	2650K	2750K	2500K	2500K	2400K	2600K	2300K	2400K	2600K	2500K	2400K
Luminous Flux / Unit	60lm	130lm	55lm	125lm	30lm	45lm	75lm	100lm	12.6lm	40lm	95lm	90lm	63lm
Life Time at 25°C	3'000h	3'000h	3'000h	3'000h	3'000h	20'000h	20'000h	20'000h	20'000h	20'000h	10'000h	20'000h	20'000h

SOFFITE

Référence	SI	SX
	Festoon	Festoon
	44 x 10mm	44 x 10mm

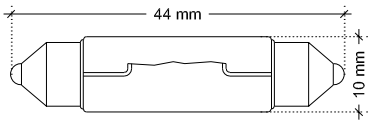

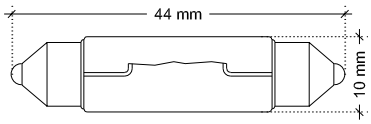

Technical Datas:

Type	Standard						Long Life			
Glass	Clear or Frosted						Clear or frosted			
Voltage	12V			24V			12V		24V	
Power	3 W	5 W	10 W	3 W	5 W	10 W	5 W	10 W	5 W	10 W
CCT - Kelvin	2400K	2500K	2600K	2400K	2500K	2600K	2600K	2700K	2600K	2700K
Luminous Flux / Unit	30lm	38lm	120lm	20lm	38lm	80lm	50lm	120lm	50lm	120lm
Life Time at 25°C	1'000 h	1'000 h	1'000 h	1'000 h	1'000 h	1'000 h	3'000 h	3'000 h	3'000 h	3'000 h

AGA-LED® B2 - G2

Référence	02LS03/G2	02LS04/G2	02LS05/G2
	Festoon 45 x 12 x 2.7 mm	Rigid Loop 43 x 12 x 2.7 mm	Clip 4 Positions 42.2 x 12 x 2.7 mm

Technical Datas:

Leds per unit	2			
Light Source	Nichia			
Voltage	24V			
Power	1.2 W			
CCT - Kelvin	**2000K**	**2400K**	**2800K**	**4000K**
Luminous Flux / Unit	**40 ~ 68 lm**	**48 - 81 lm**	**68 ~114 lm**	**68 ~114 lm**
CRI	80			
Viewing Angle	120°			
Operating T°	-20°C / +40°C			
Life Time at 25°	50'000h			
L70 at 85°C	36'000h			

AGA-LED® B3 - G2

Référence	03LS29/G2	03LS30/G2	03LS31/G2
	Festoon 45 x 12 x 2.7 mm	Rigid Loop 43 x 12 x 2.7 mm	Clip 4 Positions 42.2 x 12 x 2.7 mm

Technical Datas:

Leds per unit	3			
Light Source	Nichia			
Voltage	24V			
Power	0.96 W			
CCT - Kelvin	**2000K**	**2400K**	**2800K**	**4000K**
Luminous Flux / Unit	**40 ~ 82 lm**	**58 - 97 lm**	**82 ~137 lm**	**82 ~137 lm**
CRI	80			
Viewing Angle	120°			
Operating T°	-20°C / +40°C			
Life Time at 25°	50'000h			
L70 at 25°C	36'000h			

AGABEKOV SA ***Manufacture*** 6, ROUTE DE COMPOIS
CH-1222 VESENAZ - GENEVA - SWITZERLAND
Tel. +41 22 752 47 45 Fax. +41 22 752 37 08
Email: info@agabekov.com

AGABEKOV SA ***Bureau d'étude*** 6, ROUTE DE COMPOIS
CH-1222 VESENAZ - GENEVA - SWITZERLAND
Tel. +41 22 752 47 45 Fax. +41 22 752 37 08
Internet: www.agabekov.com

AGA-LED® B4 - G2

Référence	04LS32/G2	04LS33/G2	04LS34/G2
	Festoon 45 x 12 x 2.7 mm	Rigid Loop 43 x 12 x 2.7 mm	Clip 4 Positions 42.2 x 12 x 2.7 mm

Technical Datas:

Leds per unit	4			
Light Source	Nichia			
Voltage	24V			
Power	1.2 W			
CCT - Kelvin	**2000K**	**2400K**	**2800K**	**4000K**
Luminous Flux / Unit	**46 ~ 78 lm**	**55 - 93 lm**	**66 ~111 lm**	**66 ~111 lm**
CRI	80			
Viewing Angle	120°			
Operating T°	-20°C / +40°C			
Life Time at 25°	50'000h			
L70 at 25°C	36'000h			

AGA-LED® B6 - G2

Référence	06LS23/G2	06LS24/G2	06LS25/G2
	Festoon 45 x 12 x 2.7 mm	Rigid Loop 43 x 12 x 2.7 mm	Clip 4 Positions 42.2 x 12 x 2.7 mm

Technical Datas:

Leds per unit	6			
Light Source	Nichia			
Voltage	24V			
Power	1.2 W			
CCT - Kelvin	**2000K**	**2400K**	**2800K**	**4000K**
Luminous Flux / Unit	**70 ~ 118 lm**	**83 - 140 lm**	**99 ~166 lm**	**99 ~166 lm**
CRI	80			
Viewing Angle	120°			
Operating T°	-20°C / +40°C			
Life Time at 25°	50'000h			
L70 at 25°C	36'000h			

AGA-LED® FT

Référence	FTR21		FT21		FTR31		FT31	
	Rigid Loop		Festoon		Rigid Loop		Festoon	
	44 x 12 mm		42 x 12 mm		44 x 12 mm		42 x 12 mm	
	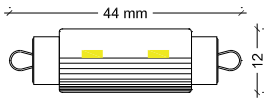		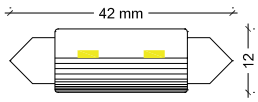		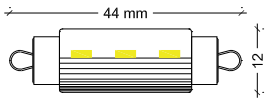		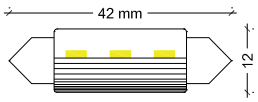	
Technical Datas:								
Leds per unit	2				3			
Light Source	Epistar				Epistar			
Voltage	12V or 24V				12V or 24V			
Power	0.45 W							
CCT - Kelvin	2300K	2800K	3900K	5300K	2300K	2800K	3900K	5300K
Luminous Flux / Unit	16~18 lm	19~21 lm	22~24 lm	22~24 lm	37~54 lm	41~61 lm	47~70 lm	47~70 lm
CRI	75	70	70	70	75	80	80	80
Viewing Angle	120°				120°			
Operating T°	-20°C / +45°C				-20°C / +45°C			
Life Time at 25°	25'000 h				25'000 h			

AGA-LED® A10

Référence	10LT12		10LT09
	Rigid Loop		Festoon
	43 x 12 x 14.4 mm		45 x 12 x 14.4 mm
	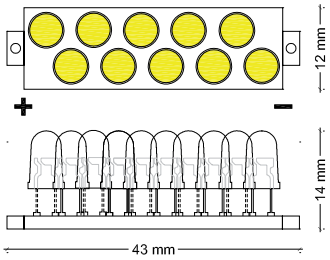		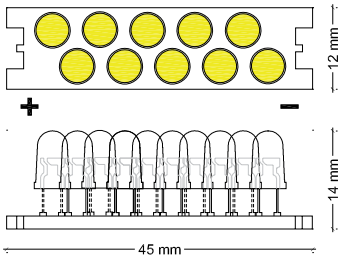
Technical Datas:			
Leds per unit	10		
Light Source	Nichia		
Voltage	24V		
Power	1 W		
CCT - Kelvin	2800K	4000K	
Luminous Flux / Unit	40lm	45lm	
CRI	80		
Viewing Angle	15°		
Operating T°	-30°C / +55°C		
Life Time at 25°	60'000 h		
L50 at 25°C	20'000 h		
Optionnal Accessories:	AGC		

AGABEKOV SA ***Manufacture*** 6, ROUTE DE COMPOIS
CH-1222 VESENAZ - GENEVA - SWITZERLAND
Tel. +41 22 752 47 45 Fax. +41 22 752 37 08
Email: info@agabekov.com

AGABEKOV SA ***Bureau d'étude*** 6, ROUTE DE COMPOIS
CH-1222 VESENAZ - GENEVA - SWITZERLAND
Tel. +41 22 752 47 45 Fax. +41 22 752 37 08
Internet: www.agabekov.com

	AGA-LED® RGB	AGA-POWER-LED	
Référence	**09LS05**	**03LP22**	**03LP22_RGB**
	45 x 25 x 1.6 mm	55 x 44 x 17 mm	

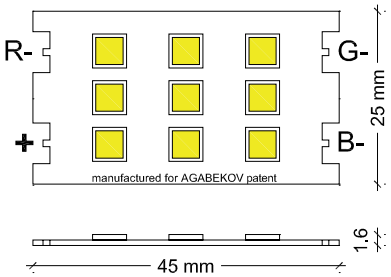

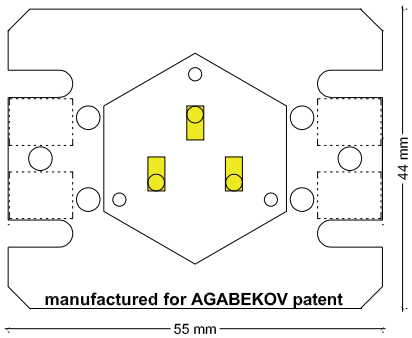

Technical Datas:

Leds per unit	9				3		3 (Red, Green, Blue)			
Light Source	Nichia				Lumiled SMD		Lumiled SMD			
Voltage	24V				24V		24V			
Power	1.75 W				3.4 W		3.2 W			
CCT - Kelvin	**White 8000K**	**Red 620nm**	**Green 530nm**	**Blue 470nm**	**2900K**	**4000K**	**Unit**	**Red 627nm**	**Green 530nm**	**Blue 470nm**
Luminous Flux / Unit	**47.7lm**	**17.1lm**	**25.2lm**	**5.4lm**	**198 - 246lm**	**243 - 345lm**	**91-107lm**	**28-34lm**	**47-52lm**	**16-21lm**
CRI					80					
Viewing Angle	115°				120°		120°			
Operating T°	-30°C / +45°C				-30°C / +45°C		-30°C / +45°C			
Life Time at 25°	60'000 h				60'000 h		60'000 h			
L70 at 25°C	15'000 h				50'000 h		50'000 h			

AGA-LED® BUR

Référence	**BUR_14**	**06LT04**
	ø16 x 25mm	ø16.8 x 18mm

Technical Datas:

Nb of Leds	1		6	
Light Source	Cree		Nichia	
Voltage	24V		24V	
Power	1.8 W		0.48W	
CCT - Kelvin	**2200K**	**4000K**	**2800K**	**5000K**
Luminous Flux	**67~74 lm**	**107~114 lm**	**24 lm**	**30 lm**
CRI	80		80	
Viewing Angle	14°		15°	
Operating T°	-20°C / +40°C		-30°C / 50°C	
Life Time at 25°	50'000h		60'000h	
L70 at 85°C	36'000h		20'000h	

FLEX LED

Référence	Flex Led
	10m x 8 x Ht2.1mm (cutable every 100mm)

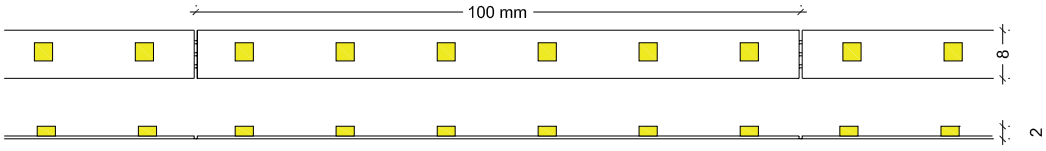

Technical Datas:

Nb of Leds	60/m			
Voltage	24V			
Power	4.8W/m			
CCT - Kelvin	**2700K**	**3000K**	**4000K**	**5000K**
Luminous Flux	**81 lm/W**	**81 lm/W**	**88 lm/W**	**88 lm/W**
CRI	>80			
Life Time at 25°	50'000h			

FUORESCENT TUBE

Référence	T5-549			T5-849			T5-1149			T5-1449		
	ø16 x 549 mm			ø16 x 849 mm			ø16 x 1149 mm			ø16 x 1449 mm		

Technical Datas:

Voltage	220 - 240V			220 - 240V			220 - 240V			220 - 240V		
Power	14W			21W			28W			35W		
CCT - Kelvin	2700K	3000K	4000K	2700K	3000K	4000K	2700K	3000K	4000K	2700K	3000K	4000K
Luminous Flux / Unit	1200lm	1200lm	1200lm	2100lm	2100lm	2100lm	2900lm	2900lm	2900lm	3650lm	3650lm	3650lm
Viewing Angle	360°			360°			360°			360°		
Life Time at 25°	48'000 h			48'000 h			48'000 h			48'000 h		

AGABEKOV SA ***Manufacture*** 6, ROUTE DE COMPOIS
CH-1222 VESENAZ - GENEVA - SWITZERLAND
Tel. +41 22 752 47 45 Fax. +41 22 752 37 08
Email: info@agabekov.com

AGABEKOV SA ***Bureau d'étude*** 6, ROUTE DE COMPOIS
CH-1222 VESENAZ - GENEVA - SWITZERLAND
Tel. +41 22 752 47 45 Fax. +41 22 752 37 08
Internet: www.agabekov.com

AGABEKOV
LIGHTING COMPANY INTERNATIONAL®

1993-2013
20 YEARS OF ILLUMINATION OF LOUVRE IN PARIS

In 1993 President Mitterand initiated a very important project of renovation of the Cour Carrée of the Louvre and Cour Napoléon (Pyramide).
We were contacted by EDF (Electricité de France) to make the lighting test on the façade of Louvre.
Collaborating with EDF's lighting laboratory and based on our patented B-Light product, our luminaries Louvre 3 and Louvre Neptune were born.

We have since then lit numerous historical monuments and prestigious palaces all over the world, just to mention few, French Academy, College de France in Paris, Hotel Majestic in Montreux, Hotel Beau Rivage in Lausanne, National Palace of Mexico, etc.

Now 20 years later, the technology has evolved and we have adapted our products to it.
We have developed the sources AGA-Led units (patented) which permits us to replace the xenon sources in existing luminaries. We have even succeeded to obtain the color temperature which is almost equivalent to the color temperature of Xenon 2400K°.

Hôtel du Palais, Biarritz

Pont Marguerite, Budapest

Palais Sponza, Dubrovnik

Collège de France, Paris

Palais des congrés, Biarritz

Hôtel Majestic, Montreux

Palais Princier de Monaco

For more information don't hesitate to contact us: info@agabekov.com or www.agabekov.com

DESIGN AGABEKOV

AGABEKOV SA ***Manufacture*** 6, ROUTE DE COMPOIS
CH-1222 VÉSENAZ - GENEVA - SWITZERLAND
Tel. +41 22 752 47 45 Fax. +41 22 752 37 08
E-mail: info@agabekov.com

AGABEKOV
AGA-LED®
AGA-POWER-RGB

AGABEKOV SA ***Bureau d'etudes*** 73, ROUTE DE THONON
CH-1222 VÉSENAZ - GENEVA - SWITZERLAND
Tel. +41 22 752 47 45 Fax. +41 22 752 37 08
Internet: www.agabekov.com

B® LIGHT

Référence	LRB / LRH AGABEKOV SYSTEM	LF LINEAR FLEX	TLF TWIN LINEAR FLEX
IP Protection	IP20	IP20	IP20
Profil	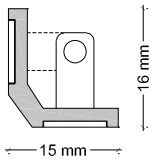	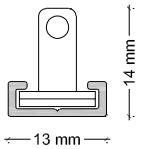	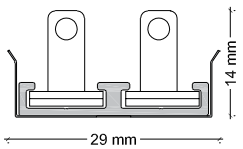
Lighting Unit:			
Aga-Led® Type A		● ●	● ●
Aga-Led® Type B		● ● ●	● ● ●
Led Type FT	●	● ●	● ●
Aga-Led® RGB			●
Optionnal Fixation:	Self Adhesive	BFA FCP / FCP-S	TFCP / TFCP-S
Optionnal Accessories:			

Référence	LU4 UNIVERSAL 4	LU4C UNIVERSAL 4 CACHE	LU3 UNIVERSAL 3
IP Protection	IP20	IP20	IP20
Profil	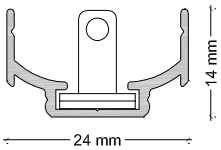	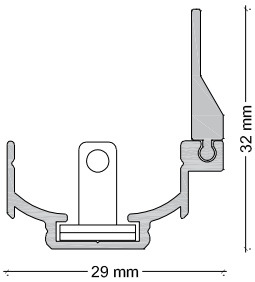	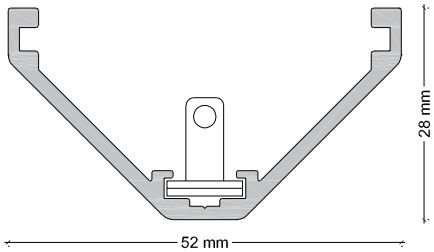
Lighting Unit:			
Aga-Led® Type A	● ●	● ●	● ●
Aga-Led® Type B	● ●	● ●	● ●
Led Type FT	● ●	● ●	● ●
Optionnal Fixation:	FCU	FCU	ABA-B / ABA-N - ABS-B / ABS-N
Optionnal Accessories:	**Cover**: VRC / VRM, VSC / VSM **End Caps**: EU4, EU4C*	**Cover**: VRC / VRM, VSC / VSM **End Caps**: EU4, EU4C*	**Cover**: VAU/VOU*, VAS / VOS, CFL / CFP1 **Grid**: GRPA **End Caps**: EPA **Other**: ARLS
	** For VSC/VSM Cover*	** For VSC/VSM Cover*	** Not possible with Aga-Led® Type A*

● = can be used with = Rigid Loop Connector = Festoon Connector = 4 Positions Connector

AGABEKOV SA ***Manufacture*** 6, ROUTE DE COMPOIS
CH-1222 VESENAZ - GENEVA - SWITZERLAND
Tel. +41 22 752 47 45 Fax. +41 22 752 37 08
Email: info@agabekov.com

AGABEKOV SA ***Bureau d'étude*** 6, ROUTE DE COMPOIS
CH-1222 VESENAZ - GENEVA - SWITZERLAND
Tel. +41 22 752 47 45 Fax. +41 22 752 37 08
Internet: www.agabekov.com

Référence	LU5 UNIVERSAL 5			LU6 UNIVERSAL 6	
IP Protection	IP20			IP20	
Profil	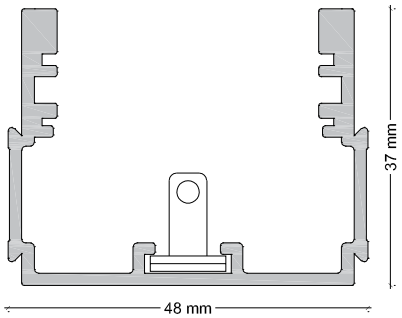			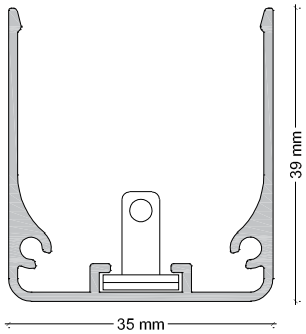	
Lighting Unit:					
Aga-Led® Type A	●		●	●	●
Aga-Led® Type B	●		●	●	●
Led Type FT	●		●	●	●
Optionnal Fixation:	FELM				
Optionnal Accessories:	**Cover** VAS / VOS	**Grid** GLA / GLB GTC / GTD * For VAS/VOS Cover	**End Caps** ECM*	**Cover** CRPS VSM6	**End Caps** ERPS ERPS-N

Référence	LT2 TUBULAIRE 2			LP WARDROBE LIGHTNG		LPW WARDROBE LIGHTNG WOOD FINISH	
IP Protection	IP20			IP20		IP20	
Profil	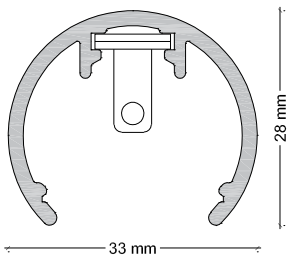			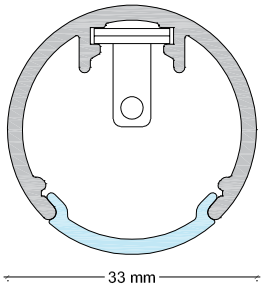		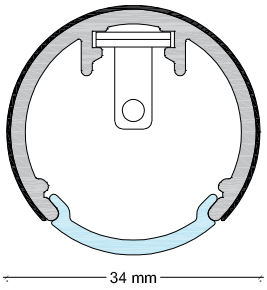	
Lighting Unit:							
Aga-Led® Type A	●						
Aga-Led® Type B	●			●		●	
Led Type FT	●			●		●	
Optionnal Fixation:	RBA-B / RBA-N RBS-B / RBA-N			FC FT1		FC-W FT1-W	
Optionnal Accessories:	**Cover** VFC / VFO	**Grid** GRPR	**End Caps** EPR EPR190	**Cover** VFC / VFO	**End Caps** EPR190	**Cover** VFC / VFO	**End Caps** EPR190

● = can be used with = Rigid Loop Connector = Festoon Connector = 4 Positions Connector

AGABEKOV SA ***Manufacture*** 6, ROUTE DE COMPOIS
CH-1222 VESENAZ - GENEVA - SWITZERLAND
Tel. +41 22 752 47 45 Fax. +41 22 752 37 08
Email: info@agabekov.com

AGABEKOV SA ***Bureau d'étude*** 6, ROUTE DE COMPOIS
CH-1222 VESENAZ - GENEVA - SWITZERLAND
Tel. +41 22 752 47 45 Fax. +41 22 752 37 08
Internet: www.agabekov.com

Référence	LAV LED WATERPROOF SYSTEM	LU4SAL Silicone SILICONE UNIVERSAL 4	LU4CSAL Silicone SILICONE UNIVERSAL 4 CACHE
IP Protection	IP67	IP67	IP67
Profil	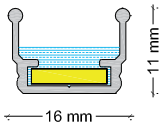	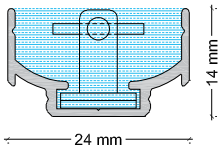	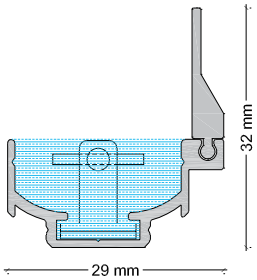
Lighting Unit:			
Aga-Led® Type B		●	●
Flex LED	●		
Optionnal Fixation:	FCU	FCU	FCU
Optionnal Accessories:	**Connector** GA-2	**Cover** VRC / VRM VSC / VSM	**Cover** VRC / VRM VSC / VSM

Référence	LU4E MINI LOUVRE UNIVERSAL 4	CLIP-IN MINI LOUVRE UNIVERSAL 4 BALUSTRADE	LU6AL Silicone SILICONE UNIVERSAL 6
IP Protection	IP65	IP65	IP67
Profil	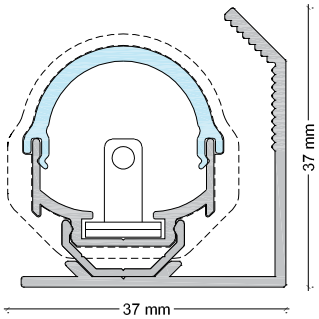	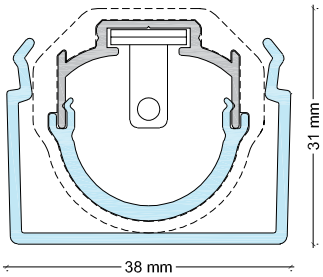	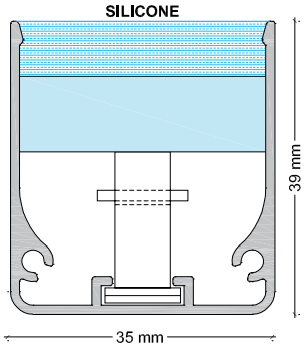
Lighting Unit:			
Aga-Led® Type A	●		
Aga-Led® Type B	● ●	●	●
Led Type FT	● ●	●	
Optionnal Fixation:		FCUB	
Optionnal Accessories:	**Cover** VRME	**Cover** VRME	

● = can be used with = Rigid Loop Connector = Festoon Connector = 4 Positions Connector

AGABEKOV SA ***Manufacture*** 6, ROUTE DE COMPOIS
CH-1222 VESENAZ - GENEVA - SWITZERLAND
Tel. +41 22 752 47 45 Fax. +41 22 752 37 08
Email: info@agabekov.com

AGABEKOV SA ***Bureau d'étude*** 6, ROUTE DE COMPOIS
CH-1222 VESENAZ - GENEVA - SWITZERLAND
Tel. +41 22 752 47 45 Fax. +41 22 752 37 08
Internet: www.agabekov.com

Référence	AML / ARL ASYMMETRIC CEILING RECESSED FOR MIRROR ASYMMETRIC RECESSED FOR GROUND / WALL		AMLT / ARLT ASYMMETRIC CEILING RECESSED FOR MIRROR ASYMMETRIC RECESSED FOR GROUND / WALL	
IP Protection	IP44		DOUBLE CONDUCTOR - IP44	
Profil	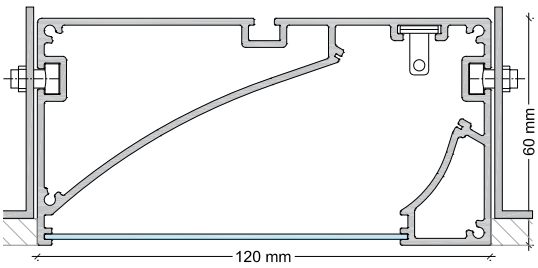		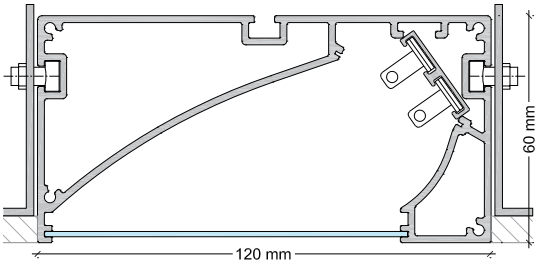	
Lighting Unit:				
Aga-Led® Type A	●	●	●	●
Aga-Led® Type B	●	●	●	●
Led Type FT	●	●	●	●
Aga-Led® RGB				●
Optionnal Fixation:	FIX (Included)		FIX (Included)	
Optionnal Accessories:	Cover VERC	End Caps ARL-G/ARL-D + EFA	Cover VERC	End Caps ARL-G/ARL-D

Référence	LLN LOUVRE NEPTUNE		LL3 LOUVRE 3	
IP Protection	IP65		IP65	
Profil	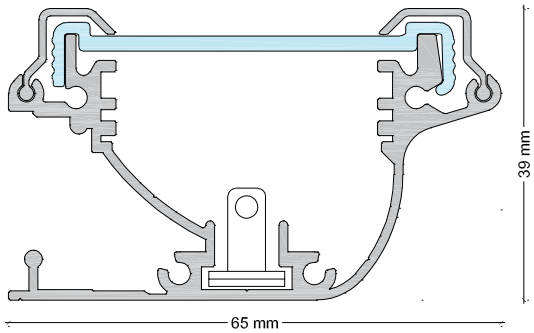		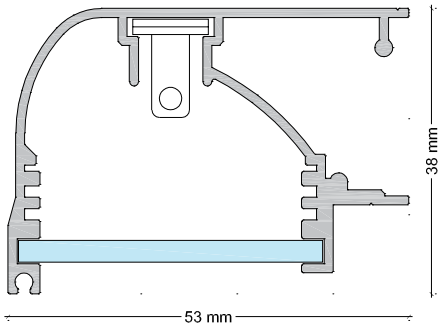	
Lighting Unit:				
Aga-Led® Type A	●		●	
Aga-Led® Type B	●		●	
Led Type FT	●		●	
Optionnal Fixation:	FLP Serie + CSN		FLP Serie + CSN	
Optionnal Accessories:	Grid GLA / GLB* GTC / GTD*	Other AP	Grid GLA / GLB* GTC / GTD*	Other CF
	* *Not possible with Aga-Led® Type A*		* *Not possible with Aga-Led® Type A*	

● = can be used with = Rigid Loop Connector = Festoon Connector = 4 Positions Connector

AGABEKOV SA ***Manufacture*** 6, ROUTE DE COMPOIS
CH-1222 VESENAZ - GENEVA - SWITZERLAND
Tel. +41 22 752 47 45 Fax. +41 22 752 37 08
Email: info@agabekov.com

AGABEKOV SA ***Bureau d'étude*** 6, ROUTE DE COMPOIS
CH-1222 VESENAZ - GENEVA - SWITZERLAND
Tel. +41 22 752 47 45 Fax. +41 22 752 37 08
Internet: www.agabekov.com

Référence	LU4T 68 LOUVRE 4 TUBE 68	LU4TD 68 LOUVRE 4 TUBE 68 DOUBLE CONDUCTOR	LU4T 66 LOUVRE 4 TUBE 66	LU4TD 66 LOUVRE 4 TUBE 66 DOUBLE CONDUCTOR
IP Protection	IP68	IP68	IP66	IP68
Profil	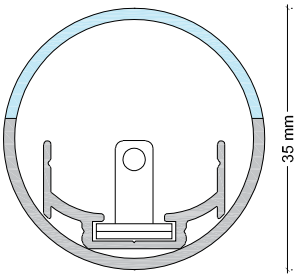	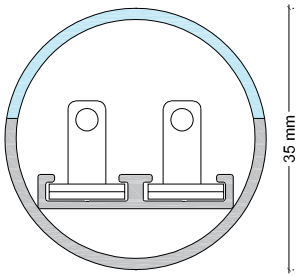	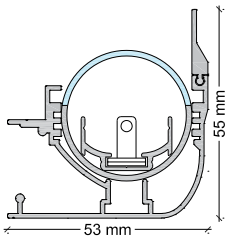	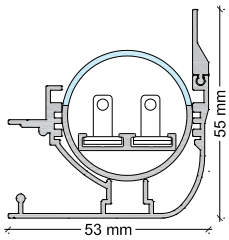
Lighting Unit:				
Aga-Led® Type A	● ●		● ●	
Aga-Led® Type B	● ● ●	●	● ● ●	●
Led Type FT	● ●	●	● ●	●
Aga-Led® RGB		●		●
Optionnal Fixation:	FL	FL	FLP Serie + CSN	FLP Serie + CSN

Référence	LAPL MONO - LAPL RGB AGA-POWER LED WHITE or RGB
IP Protection	IP65
Profil	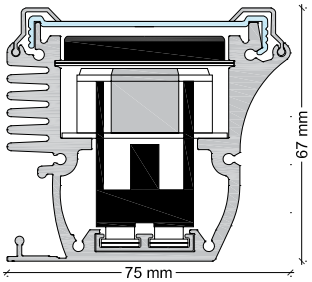
Lighting Unit:	
Aga-Power® LED	●
Aga-Power® RGB	●
Optionnal Fixation:	FLP Serie + CSN-AP
Optionnal Accessories:	RAPI BOX RAPI COVER + GL

● = can be used with = Rigid Loop Connector = Festoon Connector = 4 Positions Connector

AGABEKOV SA ***Manufacture*** 6, ROUTE DE COMPOIS
CH-1222 VESENAZ - GENEVA - SWITZERLAND
Tel. +41 22 752 47 45 Fax. +41 22 752 37 08
Email: info@agabekov.com

AGABEKOV SA ***Bureau d'étude*** 6, ROUTE DE COMPOIS
CH-1222 VESENAZ - GENEVA - SWITZERLAND
Tel. +41 22 752 47 45 Fax. +41 22 752 37 08
Internet: www.agabekov.com

Référence	LESI ASYMMETRIC RECESSED GROUND / WALL LOUVRE	
IP Protection	IP65	
Profil	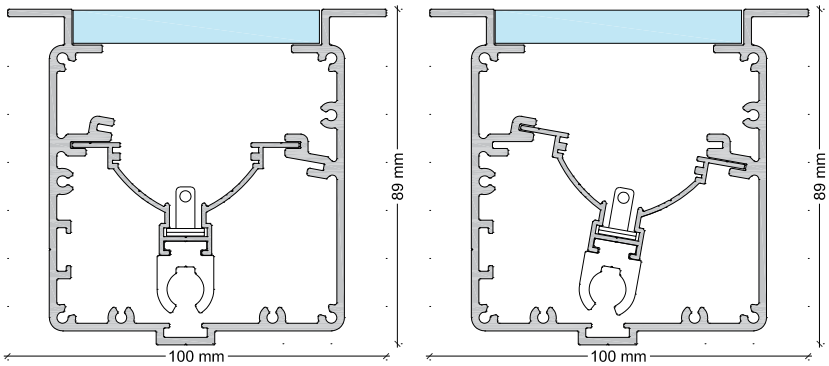	
Lighting Unit:		
Aga-Led® Type A	●	
Aga-Led® Type B	●	●
Led Type FT	●	
Optionnal Fixation:		
Optionnal Accessories:	**Grid** GLA* / GLB* GTC* / GTD*	**Box** LESI BOX
	** Only with Aga-Led® Type B*	

Référence	LASY ASYMMETRIC RECESSED LOUVRE		LASYT TUBE ASYMMETRIC RECESSED LOUVRE
IP Protection	IP67		IP67
Profil	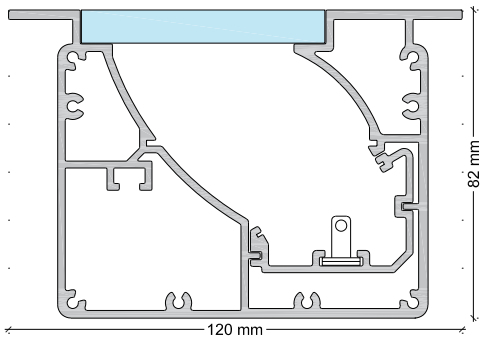		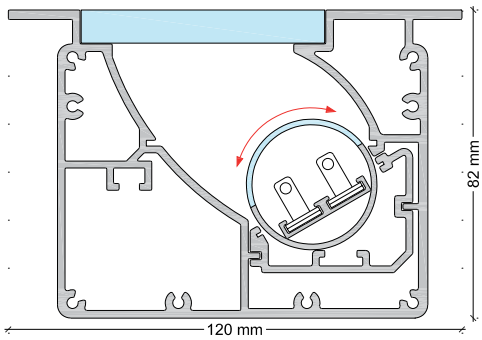
Lighting Unit:			
Aga-Led® Type A	●		
Aga-Led® Type B	●	●	●
Led Type FT	●		●
Aga-Led® RGB			●
Optionnal Accessories:	**Grid** GTSE*	**Box** LASY BOX	**Box** LASY BOX
	** Only with Aga-Led® Type B*		

● = can be used with = Rigid Loop Connector = Festoon Connector = 4 Positions Connector

AGABEKOV SA ***Manufacture*** 6, ROUTE DE COMPOIS
CH-1222 VESENAZ - GENEVA - SWITZERLAND
Tel. +41 22 752 47 45 Fax. +41 22 752 37 08
Email: info@agabekov.com

AGABEKOV SA ***Bureau d'étude*** 6, ROUTE DE COMPOIS
CH-1222 VESENAZ - GENEVA - SWITZERLAND
Tel. +41 22 752 47 45 Fax. +41 22 752 37 08
Internet: www.agabekov.com

Référence	LF LINEAR FLEX	TLF TWIN LINEAR FLEX
IP Protection	IP20	IP20
Profil	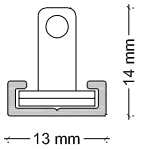	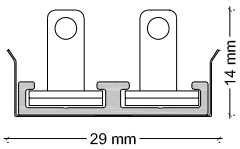
Lighting Unit: *Xenon* *Soffite*	● ●	● ●
Optionnal Fixation:	BFA FCP / FCP-S	TFCP / TFCP-S
Optionnal Accessories:		

Référence	LU4 UNIVERSAL 4	LU4C UNIVERSAL 4 CACHE	LU3 UNIVERSAL 3
IP Protection	IP20	IP20	IP20
Profil	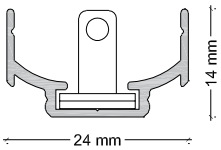	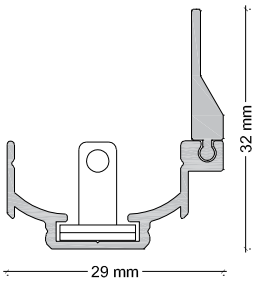	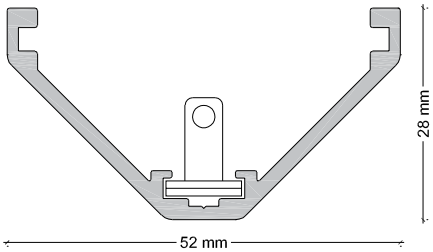
Lighting Unit: *Xenon* *Soffite*	● ●	● ●	● ●
Optionnal Fixation:	FCU	FCU	ABA-B / ABA-N - ABS-B / ABS-N
Optionnal Accessories:	**Cover** VRC / VRM* VSC / VSM* **End Caps** EU4 EU4C**	**Cover** VRC / VRM* VSC / VSM* **End Caps** EU4 EU4C**	**Cover** VAU/VOU* VAS / VOS** CFL/CFP1 **Grid** GRPA **End Caps** EPA **Other** ARLS
	** Max 3W* ***For VSC/VSM Cover*	** Max 3W* ***For VSC/VSM Cover*	** Max 3W* *** Max 5W*

● = can be used with = Rigid Loop Connector = Festoon Connector

AGABEKOV SA ***Manufacture*** 6, ROUTE DE COMPOIS
CH-1222 VESENAZ - GENEVA - SWITZERLAND
Tel. +41 22 752 47 45 Fax. +41 22 752 37 08
Email: info@agabekov.com

AGABEKOV SA ***Bureau d'étude*** 6, ROUTE DE COMPOIS
CH-1222 VESENAZ - GENEVA - SWITZERLAND
Tel. +41 22 752 47 45 Fax. +41 22 752 37 08
Internet: www.agabekov.com

Référence	LU5 UNIVERSAL 5			LU6 UNIVERSAL 6	
IP Protection	IP20			IP20	
Profil	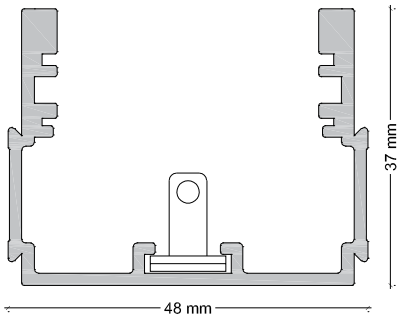			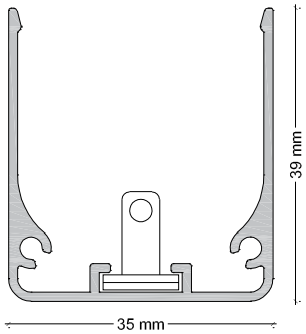	
Lighting Unit:					
Xenon	●			●	
Soffite			●		●
Optionnal Fixation:	FELM				
Optionnal Accessories:	**Cover** VAS / VOS	**Grid** GLA / GLB GTC / GTD	**End Caps** ECM*	**Cover** CRPS VSM6	**End Caps** ERPS ERPS-N

** For VAS/VOS Cover*

Référence	LT2 TUBULAIRE 2		LP WARDROBE LIGHTNG		LPW WARDROBE LIGHTNG WOOD FINISH	
IP Protection	IP20		IP20		IP20	
Profil	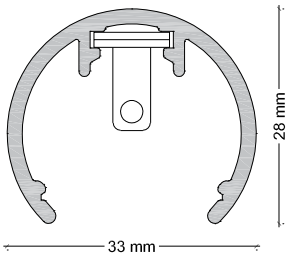		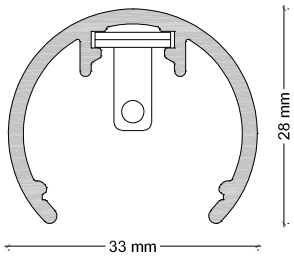		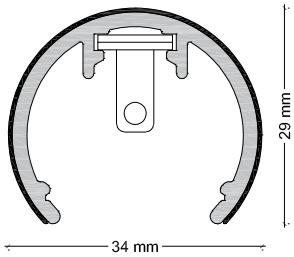	
Lighting Unit:						
Xenon	●		●		●	
Soffite		●		●		●
Optionnal Fixation:	RBA-B / RBA-N RBS-B / RBA-N		FC FT1		FC-W FT1-W	
Optionnal Accessories:	**Grid** GRPR	**End Caps** EPR EPR-190	**Grid** GRPR	**End Caps** EPR-190	**Grid** GRPR	**End Caps** EPR-190

● = can be used with = Rigid Loop Connector = Festoon Connector

AGABEKOV SA ***Manufacture*** 6, ROUTE DE COMPOIS
CH-1222 VESENAZ - GENEVA - SWITZERLAND
Tel. +41 22 752 47 45 Fax. +41 22 752 37 08
Email: info@agabekov.com

AGABEKOV SA ***Bureau d'étude*** 6, ROUTE DE COMPOIS
CH-1222 VESENAZ - GENEVA - SWITZERLAND
Tel. +41 22 752 47 45 Fax. +41 22 752 37 08
Internet: www.agabekov.com

Référence	LU4E MINI LOUVRE UNIVERSAL 4	AML / ARL ASYMMETRIC CEILING RECESSED FOR MIRROR ASYMMETRIC RECESSED FOR GROUND / WALL	
IP Protection	IP65	IP44	
Profil	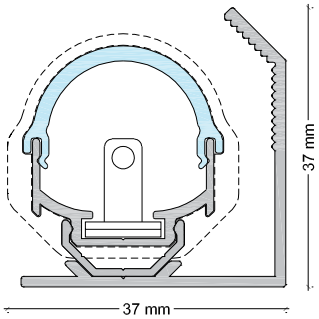	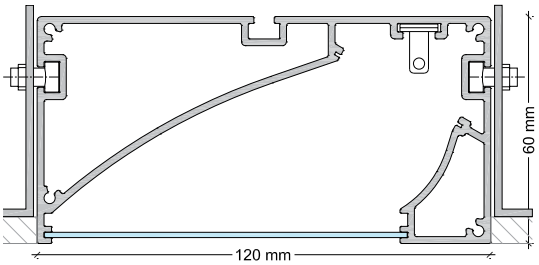	
Lighting Unit:			
Xenon	●	●	
Soffite			●
Optionnal Fixation:		FIX (Included)	
Optionnal Accessories:	**Cover** VRME	**Cover** VERC	**End Caps** ARL-G/ARL-D + EFA

Référence	LLN LOUVRE NEPTUNE		LL3 LOUVRE 3	
IP Protection	IP65		IP65	
Profil	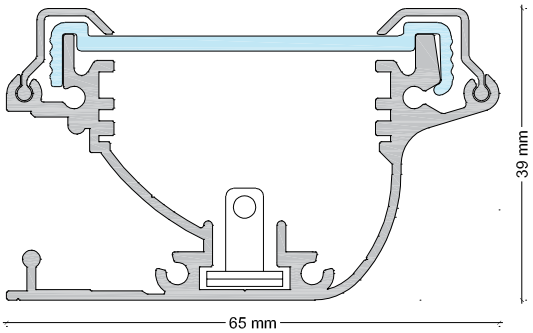		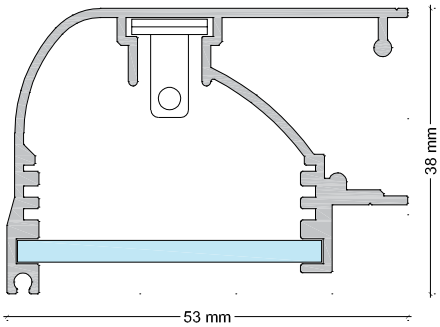	
Lighting Unit:				
Xenon	●		●	
Soffite				
Optionnal Fixation:	FLP Serie + CSN		FLP Serie + CSN	
Optionnal Accessories:	**Grid** GLA / GLB GTC / GTD	**Other** AP	**Grid** GLA / GLB GTC / GTD	**Other** CF

● = can be used with = Rigid Loop Connector = Festoon Connector

AGABEKOV SA ***Manufacture*** 6, ROUTE DE COMPOIS
CH-1222 VESENAZ - GENEVA - SWITZERLAND
Tel. +41 22 752 47 45 Fax. +41 22 752 37 08
Email: info@agabekov.com

AGABEKOV SA ***Bureau d'étude*** 6, ROUTE DE COMPOIS
CH-1222 VESENAZ - GENEVA - SWITZERLAND
Tel. +41 22 752 47 45 Fax. +41 22 752 37 08
Internet: www.agabekov.com

Référence	LU4T 68 LOUVRE 4 TUBE 68	LU4T 66 LOUVRE 4 TUBE 66
IP Protection	IP68	IP66
Profil	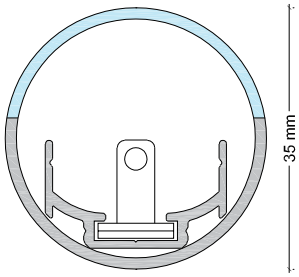	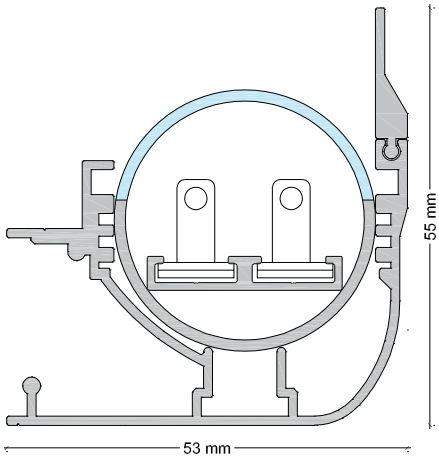
Lighting Unit:		
Xenon	● (max. 3W)	● (max. 3W)
Soffite	● (max. 3W)	● (max. 3W)
Optionnal Fixation:	FL	FLP Serie + CSN

Référence	LESI ASYMMETRIC RECESSED GROUND / WALL LOUVRE	LASY ASYMMETRIC RECESSED LOUVRE
IP Protection	IP65	
Profil	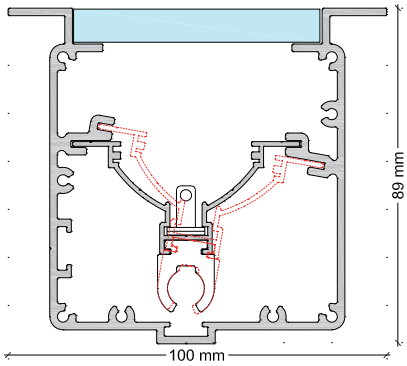	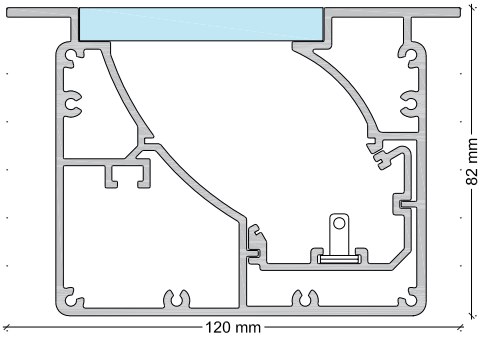
Lighting Unit:		
Xenon	●	●
Soffite		
Optionnal Accessories:	**Grid** GLA* / GLB* GTC* / GTD* **Box** LESI BOX ** Only with Xenon Lighting Unit*	**Box** LASY BOX

● = can be used with = Rigid Loop Connector = Festoon Connector

AGABEKOV SA ***Manufacture*** 6, ROUTE DE COMPOIS
CH-1222 VESENAZ - GENEVA - SWITZERLAND
Tel. +41 22 752 47 45 Fax. +41 22 752 37 08
Email: info@agabekov.com

AGABEKOV SA ***Bureau d'étude*** 6, ROUTE DE COMPOIS
CH-1222 VESENAZ - GENEVA - SWITZERLAND
Tel. +41 22 752 47 45 Fax. +41 22 752 37 08
Internet: www.agabekov.com

Référence	AML / ARL ASYMMETRIC CEILING RECESSED FOR MIRROR ASYMMETRIC RECESSED FOR GROUND & WALL	
IP Protection	IP44	
Profil	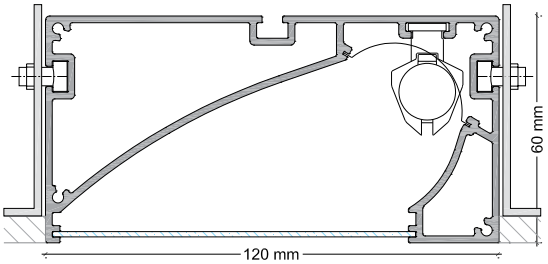	
Lighting Unit: *Tube T5*	●	
Optionnal Fixation:	FIX (Included)	
Optionnal Accessories:	**Cover** VERC	**End Caps** ARL-G/ARL-D + EFA

AGABEKOV SA ***Manufacture*** 6, ROUTE DE COMPOIS
CH-1222 VESENAZ - GENEVA - SWITZERLAND
Tel. +41 22 752 47 45 Fax. +41 22 752 37 08
Email: info@agabekov.com

AGABEKOV SA ***Bureau d'étude*** 6, ROUTE DE COMPOIS
CH-1222 VESENAZ - GENEVA - SWITZERLAND
Tel. +41 22 752 47 45 Fax. +41 22 752 37 08
Internet: www.agabekov.com

STATE MOSQUE OF QATAR

Doha, Qatar

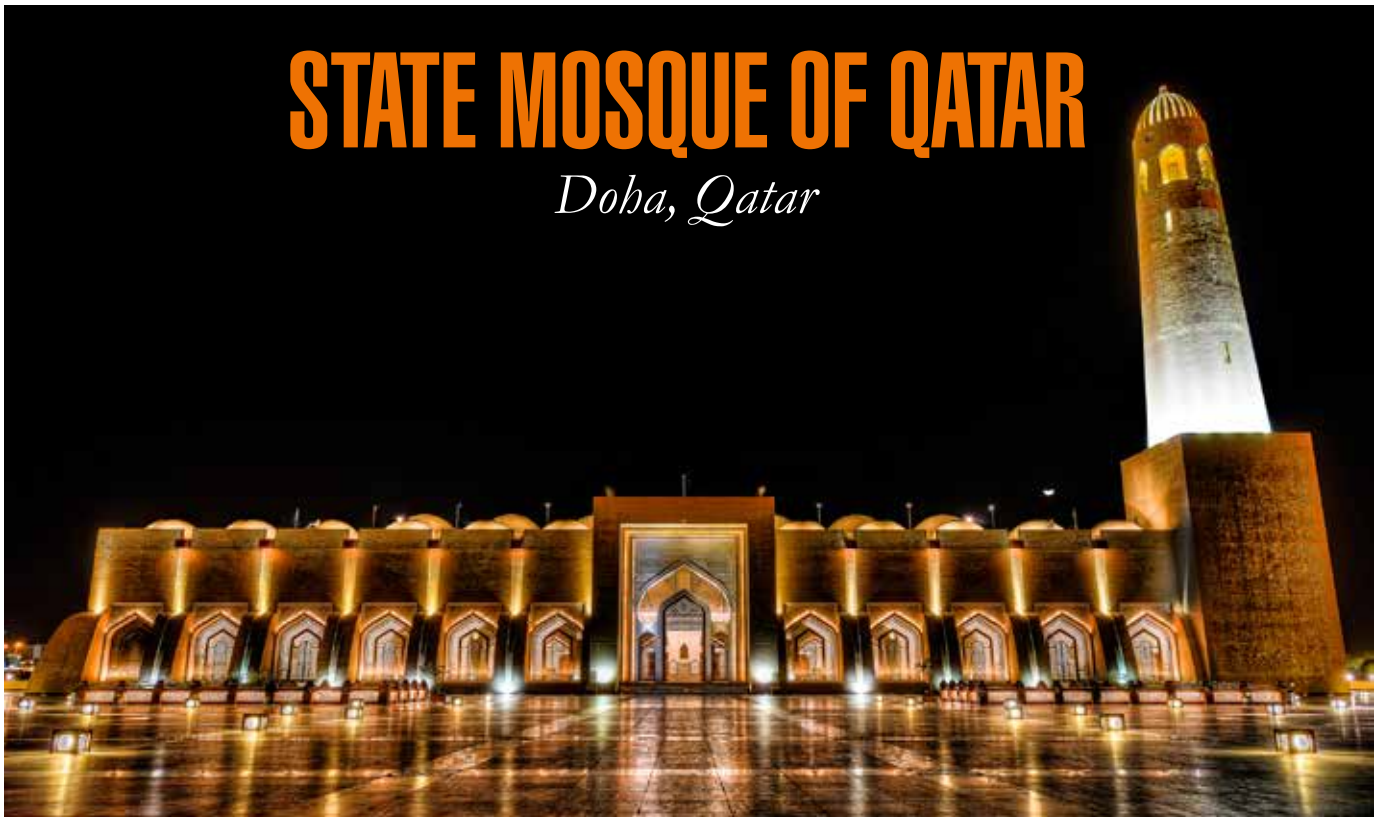

Project Management: Arab Engineering Bureau
Consultant: SMEC International Pty Ltd.
Design Consultant: Mimar Consult
Lighting Design: Architectural Lighting Design SHLD. Mr. Sabry El Harrany
Contractor: Contraco
Lighting Supplier: Lumatron Qatar wll.
Technical support and concept: AGABEKOV SA
Luminaries manufactured on measure by AGABEKOV SA on the base of B'Light® conductor.

Type of Luminaries AGABEKOV:
LFX - 1'000mm to 2'000mm x 3'036 units
LU4EX - 400mm to 2'033mm x 732 units
LU4AL - 0470mm x 202 units
LASY AC - 0550mm to 2'380mm x 63 units
Xenon Rigid Loop Lamp 24V 5W x 81'949 units
Xenon Rigid Loop Lamp 12V 8.5W x 2'604 units
AGA-LED® 24V 1.1W B10 - 2'800°K x 1'616 units

AGABEKOV
LIGHTING COMPANY INTERNATIONAL®

AGABEKOV SA ***Manufacture*** 6, ROUTE DE COMPOIS
CH-1222 VÉSENAZ - GENEVA - SWITZERLAND
Tel. +41 22 752 47 45 Fax. +41 22 752 37 08
E-mail: info@agabekov.com

AGABEKOV SA ***Bureau d'etudes*** 73, ROUTE DE THONON
CH-1222 VÉSENAZ - GENEVA - SWITZERLAND
Tel. +41 22 752 47 45 Fax. +41 22 752 37 08
Internet: www.agabekov.com

FIXTURE Référence	ABA-B / ABA-N Perpendicular support	ABS-B / ABS-N 45° support	BFA Mounting Clip
Finish	B = White / N = Black	B = White / N = Black	Aluminuim
For Luminaire	LU3	LU3	LF
Dimension	54mm x 20mm x 49mm	86mm x 20mm x 46mm	25mm x 8mm x 6mm
	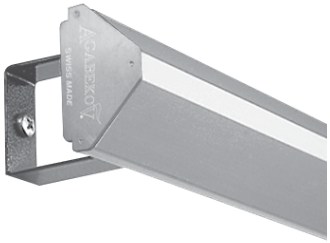	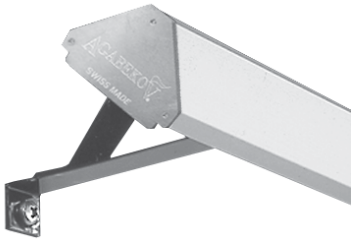	

FIXTURE Référence	CSN Security Clip for FLP Series	CSN-AP Security Clip for FLP Series	FC / FC-W Median Support
Finish	Aluminuim	Aluminuim	Aluminuim
For Luminaire	LLN + LL3 + LU4T 66 + LU4TD 66	LAPL	LP + LPW
Dimension	22mm x 31mm	25mm x 60mm	50mm x 117mm / 121mm

FIXTURE Référence	FCP / FCP-S Fixation Clip	FCU Fixation Clip	FCUB Fixation Clip
Finish	Aluminuim	Aluminuim	Aluminuim
For Luminaire	LF	LAV LED + LU4 + LU4C + LU4E	CLIP-IN
Dimension	15mm x 30mm x 10mm	16mm x 30mm x 8mm	30mm x 15mm x 22mm

FIXTURE Référence	FELM False Ceiling Mounting Support	FIX False Ceiling Mounting Support	FL Fixation Clip
Finish	Aluminuim	Aluminuim	Plastic
For Luminaire	LU5	AML + ARL + AMLT + ARLT	LU4T 68 + LU4TD 68
Dimension	24mm x 13mm	20mm x 12mm x 56mm	42mm x 45mm
		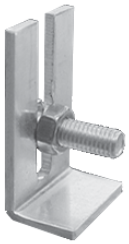	

AGABEKOV SA ***Manufacture*** 6, ROUTE DE COMPOIS
CH-1222 VESENAZ - GENEVA - SWITZERLAND
Tel. +41 22 752 47 45 Fax. +41 22 752 37 08
Email: info@agabekov.com

AGABEKOV SA ***Bureau d'étude*** 6, ROUTE DE COMPOIS
CH-1222 VESENAZ - GENEVA - SWITZERLAND
Tel. +41 22 752 47 45 Fax. +41 22 752 37 08
Internet: www.agabekov.com

FIXTURE Référence	FT1 / FT1-W Side Support	PE4 Corner fixation	TFCP / TFCP-S Fixation Clip
Finish	Aluminuim	Aluminuim	Aluminuim
Fixation for	LP / LPW	LU4 + LU4E	TLF
Dimension	ø42 x 15mm / ø45 x 15mm	35mm x 37mm	29mm x 30mm x 9mm

FIXTURE Référence	RBA-B / RBA-N Tilted support 45°	RBS-B / RBS-N Perpendicular support
Finish	B = White / N = Black	B = White / N = Black
Fixation for	LT2	LT2
Dimension	78mm x 20mm x 27mm	56mm x 23mm x 25mm

FIXTURE Référence	FLP1 Standard clip bracket	FLP1C Short clip bracket	FLPF Short clip bracket for windows
Finish	Aluminuim	Aluminuim	Aluminuim
Fixation for	LAPL + LLN + LL3	LAPL + LLN + LL3	LAPL + LLN + LL3
Dimension	48mm x 50mm	28mm x 50mm	52mm x 28mm

FIXTURE Référencee	FLP2 Adjustable clip bracket	FLPJ Clip bracket for garden	FLP3 Clip bracket
Finish	Aluminuim	Aluminuim	Aluminuim
Fixation for	LAPL + LLN + LL3	LAPL + LLN + LL3	LAPL + LLN + LL3
Dimension	228 to 341mm x 100mm	26mm x 228mm	76mm x 60mm

COVER Référence	CFL Linear front cover	CFP1 Linear front cover	CRPS Linear front cover
Finish	Aluminuim	Alumnuim	Aluminuim
For Luminaire	LU3	LU3 ARLS	LU6
Dimension	52mm x 6mm	52mm x 6mm	35mm x 9mm
		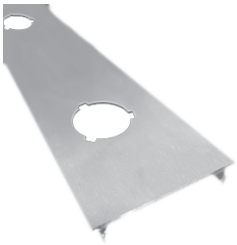	

COVER Référence	VAS / VOS Half Moon Cover	VAU / VOU Linear Glasse Cover	VERC Linear Glasse Cover
Finish	Polycarbonate Clear or Opal	Polycarbonate Clear or Opal	Polycarbonate Clear
For Luminaire	LU3 + LU5	LU3	AML + ARL + AMLT + ARLT
Dimension	52mm x 24mm	47mm x 4mm	95.5mm x 3mm
		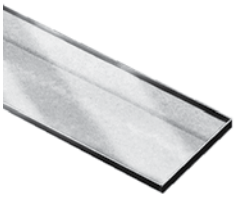	

COVER Référence	VFC / VFO Half Moon Glass Cover	VRC / VRM Half Moon Glass Cover	VRCE / VRME Half Moon Glass Cover
Finish	Polycarbonate Clear or Opal	Polycarbonate Clear or Opal	Polycarbonate Clear or Opal
For Luminaire	LT2 + LP + LPW	LU4 + LU4C	LU4E
Dimension	23mm x 8mm	22mm x 17mm	26mm x 17mm

COVER Référence	VSC / VSM Square Glass Cover	VSM6 Square Cover
Finish	Polycarbonate Clear or Opal	Polycarbonate Opal
For Luminaire	LU4 + LU4C	CLIP IN / LU6
Dimension	24mm x 17mm	36mm x 27mm
	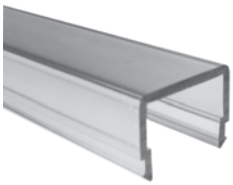	

AGABEKOV SA ***Manufacture*** 6, ROUTE DE COMPOIS
CH-1222 VESENAZ - GENEVA - SWITZERLAND
Tel. +41 22 752 47 45 Fax. +41 22 752 37 08
Email: info@agabekov.com

AGABEKOV SA ***Bureau d'étude*** 6, ROUTE DE COMPOIS
CH-1222 VESENAZ - GENEVA - SWITZERLAND
Tel. +41 22 752 47 45 Fax. +41 22 752 37 08
Internet: www.agabekov.com

GRID Référence	GLA Simple longitudinal grid	GLB Double longitudinal grid	GRPA Protection Grid
Finish	Aluminuim	Aluminuim	Aluminuim
For Luminaire	LESI / LLN / LL3 / LU5	LESI / LLN / LL3 / LU5	LU3
Dimension	38mm x 6mm	38mm x 6mm	57mm
	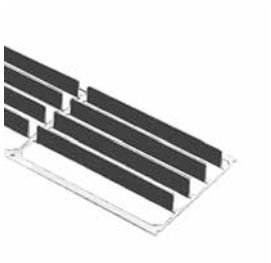	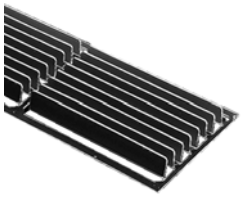	

GRID Référence	GRPR Protection Grid	GTC Simple traverse grid	GTD Double traverse grid
Finish	Stainless Steel	Aluminuim	Aluminuim
For Luminaire	LT2	LESI / LLN / LL3 / LU5	LESI / LLN / LL3 / LU5
Dimension	28mm	38mm x 6mm	38mm x 6mm
	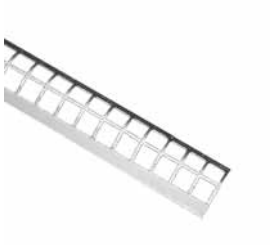		

GRID Référence	GTSE Traverse grid
Finish	Stainless Steel
For Luminaire	LESI
Dimension	60mm x 6mm

END CAPS Référence	ARL-D / ARL-G	EPA	EPAR
Finish	Aluminuim	Aluminuim	Aluminuim
For Luminaire	AML + AMLT + ARL + ARLT	LU3	LU3
Dimension	119.5mm x 7mm x 59.5mm	52mm x 2mm x 32mm	52mm x 2mm x 45.8mm

END CAPS Référence	EPR	EPR190	ERPS
Finish	Plastic	Aluminuim	Aluminuim
For Luminaire	LT2	LP + LPW	LU6
Dimension	33mm x 12.5mm	33mm x 10mm	34.6mm x 12.5mm x 39.5mm
		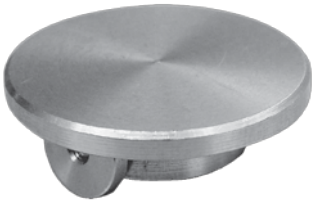	

END CAPS Référence	ERPS-N	EU4	EU4C
Finish	Plastic	Aluminuim	Aluminuim
For Luminaire	LU6	LU4 + LU4C	LU4 + LU4C
Dimension	37.6mm x 59mm x 8.5mm	23.8mm x 10mm x 13mm	23.8mm x 13mm x 25.7mm

AGABEKOV SA ***Manufacture*** 6, ROUTE DE COMPOIS
CH-1222 VESENAZ - GENEVA - SWITZERLAND
Tel. +41 22 752 47 45 Fax. +41 22 752 37 08
Email: info@agabekov.com

AGABEKOV SA ***Bureau d'étude*** 6, ROUTE DE COMPOIS
CH-1222 VESENAZ - GENEVA - SWITZERLAND
Tel. +41 22 752 47 45 Fax. +41 22 752 37 08
Internet: www.agabekov.com

BOX Référence	**LASY BOX / RAPI BOX** Recessed Inox Box	**LESI BOX** Recessed inox Box
Finish	Stainless Steel	Stainless Steel
For Luminaire	LASY - LAPL	LESI
	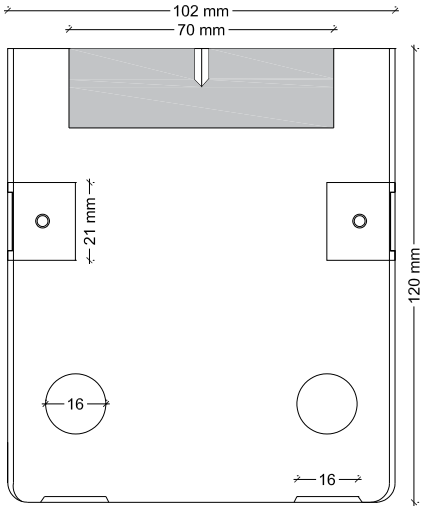	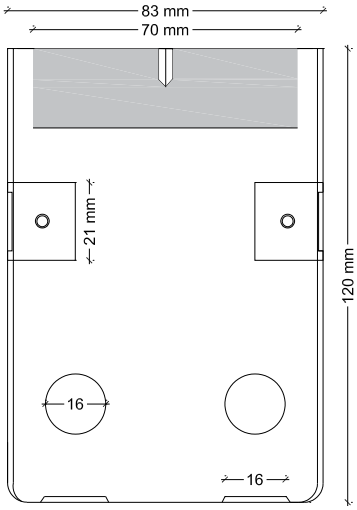

IMPORTANT

It is essentiel to provide drainage for the following recessed luminaries :
LASY - LESI & RAPI

1
PVC Material

2
Stainless Steel Box

3
Space for electrical tube Ø16mm

4
Drain for water evacuation Ø16mm

5
Drainage minimum 100mm

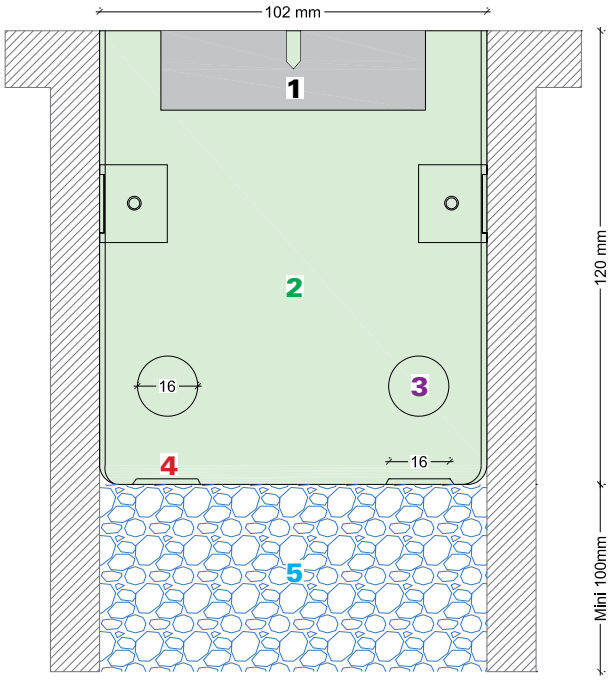

CONNECTION Référence	AF/AMS Male / female plug	COS-1 Power connector	COS-3 Power connector
For Luminaire	All	All	All
Dimension	40mm x 12.80mm x 13mm	Cable: 1m of 2x2.5mm²	Cable: 1m of 2x2.5mm²

CONNECTION Référence	COS-4 Power connector	COS-4A Power connector	GA2 Heat-shrinkable connector
For Luminaire	All	All	All
Dimension	Cable: 1m of 2x2.5mm²	Cable: 80mm+110mm of 2x2.5mm²	For 2x2.5mm² cables

Référence	AGC Anti Glare System	AP Anti Pigeon Protection	ARLS Aga-Led® Rotative Spot
Finish	- -	Aluminuim	- -
For Luminaire	Aga-Led® A10	LLN	LU3
Dimension	41mm x 12mm x 13mm	on measure	55mm x 36mm x 30mm
	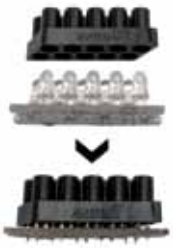		

Référence	CF Front Visor	RI Reflector 24°	RIP Reflector 60°
Finish	Aluminuim	Chrome-plated	Chrome-plated
For Luminaire	LL3	All	All
Dimension	4mm x 20mm	38.8mm x 12mm	22.2mm x 5.8mm

AGABEKOV SA ***Manufacture*** 6, ROUTE DE COMPOIS
CH-1222 VESENAZ - GENEVA - SWITZERLAND
Tel. +41 22 752 47 45 Fax. +41 22 752 37 08
Email: info@agabekov.com

AGABEKOV SA ***Bureau d'étude*** 6, ROUTE DE COMPOIS
CH-1222 VESENAZ - GENEVA - SWITZERLAND
Tel. +41 22 752 47 45 Fax. +41 22 752 37 08
Internet: www.agabekov.com

THE CATHEDRAL TREASURY OF DUBROVNIK

Riznica Katedrale, Dubrovnik, Croatia

Building: Dubrovnik Cathedral
Dubrovnik Cathedral Treasury
Light design: Antun Stedul dipl. ing. Spekto d.o .o.
Technical support and lighting on measure by AGABEKOV SA

Luminaires
Agabekov Linear lighting:
13pcs x LL3AL AGA-LED Louvre 3 24V/1.2W 2400K
4 pcs x LU4CSAL AGA-LED LU4C 24V/1.2W 2400K

AGABEKOV
LIGHTING COMPANY INTERNATIONAL®

AGABEKOV SA ***Manufacture*** 6, ROUTE DE COMPOIS
CH-1222 VÉSENAZ - GENEVA - SWITZERLAND
Tel. +41 22 752 47 45 Fax. +41 22 752 37 08
E-mail: info@agabekov.com

AGABEKOV SA ***Bureau d'etudes*** 73, ROUTE DE THONON
CH-1222 VÉSENAZ - GENEVA - SWITZERLAND
Tel. +41 22 752 47 45 Fax. +41 22 752 37 08
Internet: www.agabekov.com

AGA-LED® LIGHTING UNIT

- All AGA-LED® ligthing units manufactured for Agabekov Lighting Company International®, are coated to protect them from humidity and dust.
- The applied coating is clear acrylic formulated without chlorinated solvents or CFC's. The UV generated by sunlight, will not affect the translucence of the coating.
- The AGA-LED® units emit no UV or IR rays and are therefore ideal for lighting paintings and all items sensitives to UV or IR rays.
- The coating product withstands temperatures ranging from -40°C to 125°C.
- The contact-ends of the unit are not coated. Oxidization can occur but the three tight-fitting contact points should guarantee a reliable connection.
- The effect of humidity on the light output of an AGA-LED®, is negligible. It is the heat that speeds up the degradation.
- We exposed several AGA-LED® lighting units without coating for two years, in external conditions.

ENSURE THE CORRECT POLARITY

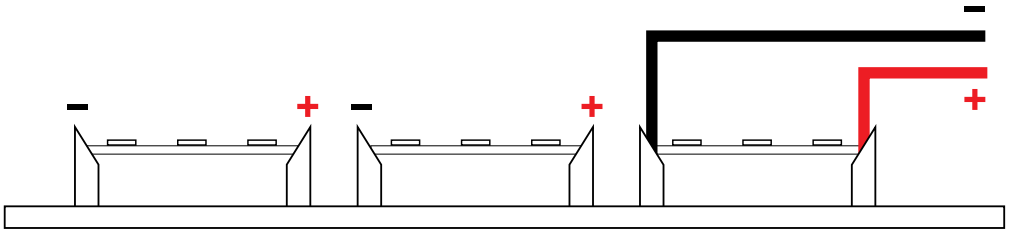

AGA-LED® TYPE B

PATENTED

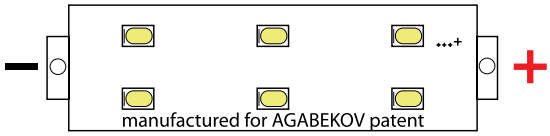

AGA-LED® TYPE B

AGABEKOV SA ***Manufacture*** 6, ROUTE DE COMPOIS
CH-1222 VESENAZ - GENEVA - SWITZERLAND
Tel. +41 22 752 47 45 Fax. +41 22 752 37 08
Email: info@agabekov.com

AGABEKOV SA ***Bureau d'étude*** 6, ROUTE DE COMPOIS
CH-1222 VESENAZ - GENEVA - SWITZERLAND
Tel. +41 22 752 47 45 Fax. +41 22 752 37 08
Internet: www.agabekov.com

CAUTION

- The LED products, in which the AGA-LED® lighting units are included, are rated as lasers and their use is subject to safety requirements.
- AGA-LED® lighting units are rated as class 3R LED products, i.e. LED / lasers emitting in the wavelength range from 302,5 nm to 106 nm.
- Take the following precaution when using AGA-v lighting units: avoid direct eye exposure to the LED light.

LOCATION OF LASER APERTURES

- The laser apertures are located on the top the of AGA-LED® lighting units.

INSTALLATION

- Never look at an AGA-LED® light source from a distance of less than 200mm. This precaution applies to all LED units to prevent eye lesions.
- Installation work must be carried out by authorised electrical contractors in conformity with local requirements. AGA-LED® must be connected to a low voltage source (12V or 24V, ±5%) with thermal protection and must be fuse-protected against short-circuits and overloads.
- Energy consumption should not exceed the rated value for the converter.
- When mounting the luminaires, never drill through the conductors.
- AGA-LED® luminaires can be mounted on furniture.

ASSEMBLY & POWER FEED

- The AGA-LED® lighting unit can be installed in all existing B´LIGHT® luminaires. The mounting system is the same as for Xenon and Festoon (Soffite) lamps. Therefore, a luminaire fitted with Xenon lamps can be repopulated with AGA-LED® lighting units. For luminaires fitted for festoon lamps, BXA supports and CMB covers must be added to fit AGA-LED® lighting units.
- Caution: when mounting or replacing an AGA-LED®, ensure the correct polarity.
- The use of one (or more) converters is necessary for luminaires with AGA-LED® lighting units. Electronic or ferromagnetic transformers are not permitted.
- Caution: ensure the correct AGA-LED® polarity.
- To obtain the maximum light output, the luminaires should be equipped with a reflector.

MAINTENANCE

- AGA-LED® lighting units have an approximate lifetime of 60'000h and no special maintenance is necessary.
- Never use water pressure jets to clean the luminaires.

STANDARDS AND TESTS

- The electrical safety tests for AGA-LED® products have been carried out by Electrosuisse (Association for Electrical Engineering, Power and Information Technologies). ENEC 13 mark of conformity received through certificate CH-02-IK-0261.i.
- The luminaires were tested according to the standards EN 60598-2-1 and 60825-1.

PROPERTY RIGHTS

- The luminaires illustrated in our catalogues are patented and protected by international property rights. Legal action will be taken in the event of any reproduction or other violation of our property rights.
- As the whole range of AGA-LED® products are subject to ongoing development, we reserve the right to modify dimensions, shapes and colours at any time.

IMPORTANT WARNING

- Agabekov SA accepts no liability in the event that equipment is fitted and/or installed by third parties without prior consultation with its technical department.

IP XX

FIRST NUMBER
PROTECTION AGAINST SOLID BODIES

0	***No Protection***
1	Protected against solid object larger than 50mm
2	Protected against solid object larger than 12mm
3	Protected against solid object larger than 2.5mm
4	Protected against solid object larger than 1mm
5	Protected against dust, no harmful deposits
6	Completely protected against dust

SECOND NUMBER
PROTECTION AGAINST LIQUID

0	***No Protection***
1	Protected against vertically falling drop of water
2	Protected against drops of water falling at up to 15° from the vertical
3	Protected against drops of rain water at up to 60° from the vertical
4	Protected against projections of water from any directions
5	Protected against low water jets from any direction. Jet of 6.3mm, pressure 30kPa
6	Protected against low water jets from any direction. Jet of 12.5mm, pressure 100kPa
7	Protected against temporary immersion in water under specified condition of pressure
8	Protected against continuous submersion in water under specified condition of pressure

AGABEKOV SA ***Manufacture*** 6, ROUTE DE COMPOIS
CH-1222 VESENAZ - GENEVA - SWITZERLAND
Tel. +41 22 752 47 45 Fax. +41 22 752 37 08
Email: info@agabekov.com

AGABEKOV SA ***Bureau d'étude*** 6, ROUTE DE COMPOIS
CH-1222 VESENAZ - GENEVA - SWITZERLAND
Tel. +41 22 752 47 45 Fax. +41 22 752 37 08
Internet: www.agabekov.com

ASK OUR TECHNICAL DEPARTMENT FOR MORE INFORMATION

European Norms Electrical Certification No. 370.069.
B'Light® conforms to the European Standards EN 60.598.1 and EN 60.598.2.1 and EN 60.825-1, class III, IP. These standards cover all aspects of product safety, including electrical, mechanical and thermal specifications. The electrical tests on B'Light® products were carried out by the Swiss Electrotechnical Association. Compliance certification ENEC 13 No. 95.110960.

All products subject to the EMC guideline 89 / 336 (electromagnetic compatibility) and the guideline 73/23 (low voltage) meet the requirements therein and bear the CE symbol on their packaging
Products with discharge lamps and electronic components in accordance with the valid EN norm, which in the basis of the EMC guideline 89/336 (electromagnetic compatibility) do not cause interference

USA certification Standard for Luminaires UL1598/CSA C22.2 No.250.0-00

UL Underwriters Laboratories Inc.

GOST Mark Certification - Russian safety standards

European certification according to CCA procedures (CENELEC Certification Agreement) with NTR (Notification of Test Results)
Confirmation of conformity with safety and EMC standard

FCC United State
Federal Communications Commission

Restriction of Hazardous Substances Directive in electrical and electronic equipment 2002/95/EC
Lead (Pb) / Mercury (Hg) / Cadmium (Cd) / Hexavalent chromium (Cr6+)
Polybrominated biphenyls (PBB) / Polybrominated diphenyl ether (PBDE)

All luminaries meet the F requirements in accordance with EN 60598-1 and are suitable for mounting on normally flammable surfaces (housing parts)

Class I Luminaires
Basic insulation plus protective earth connector

Class II Luminaires
Double or reinforced insulation, no provision for protective earthing

Class III Luminaires
Supply of safety extra-low voltage

IPXX

Protection mode IP (more information previous page)

AGABEKOV SA
Green Power
Energy Saving

DISTRIBUTOR

THE LUMINARIES ILLUSTRATRED IN OUR CATALOGUES ARE PATENTED AND PROTECTES BY INTERNATIONAL PROPERTY RIGHTS. LEGAL ACTION WILL BE TAKEN IN THE EVENT OF ANY REPRODUCTION OR OTHER VIOLATION OF OUR PROPERTY RIGHTS.

AGABEKOV SA ***Manufacture*** 6, ROUTE DE COMPOIS
CH-1222 VESENAZ - GENEVA - SWITZERLAND
Tel. +41 22 752 47 45 Fax. +41 22 752 37 08
Email: info@agabekov.com

AGABEKOV SA ***Bureau d'étude*** 6, ROUTE DE COMPOIS
CH-1222 VESENAZ - GENEVA - SWITZERLAND
Tel. +41 22 752 47 45 Fax. +41 22 752 37 08
Internet: www.agabekov.com